DYNAMIC WHITE PANEL WIRING
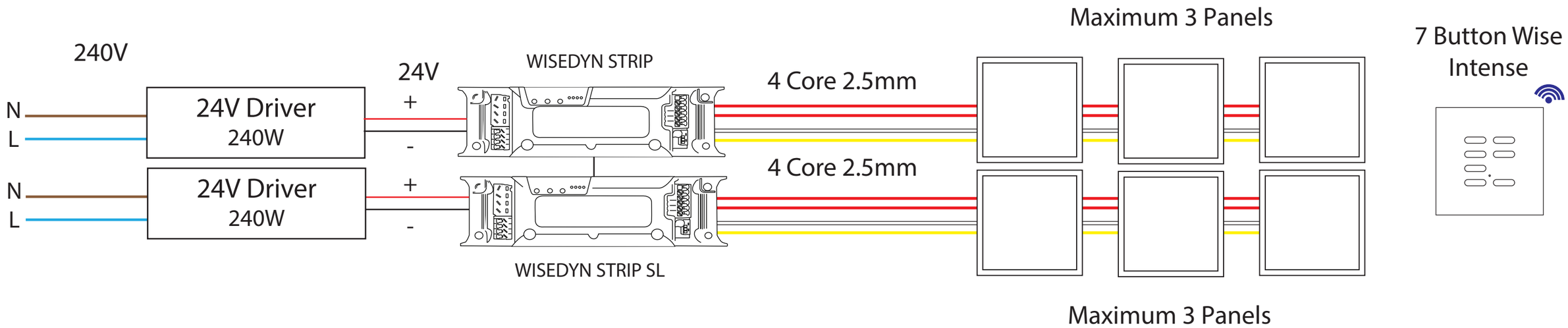
WISEDYN STRIP = 200W
DYN WHITE PANEL = LED PANEL 30W CCT