click

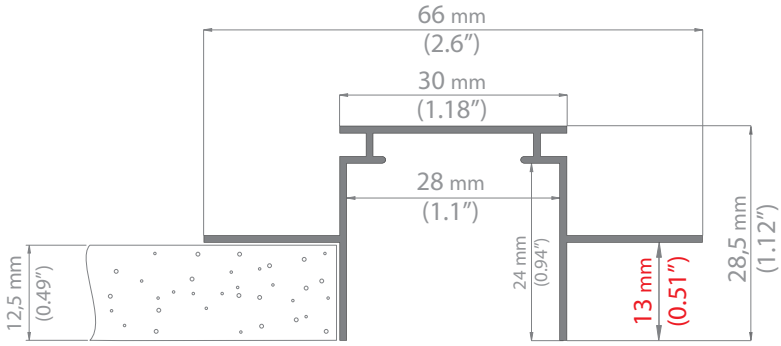
66 mm
(2.6")
30 mm
(1.18")
28 mm
(1.1")
12,5 mm
(0.49")
24 mm
(0.94")
13 mm
(0.51")
28,5 mm
(1.12")

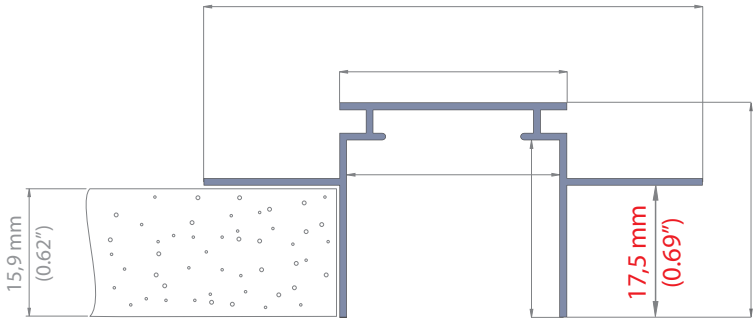
15,9 mm
(0.62")
17,5 mm
(0.69")

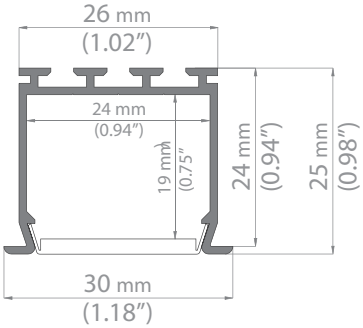
26 mm
(1.02")
24 mm
(0.94")
19 mm
(0.75")
24 mm
(0.94")
25 mm
(0.98")
30 mm
(1.18")

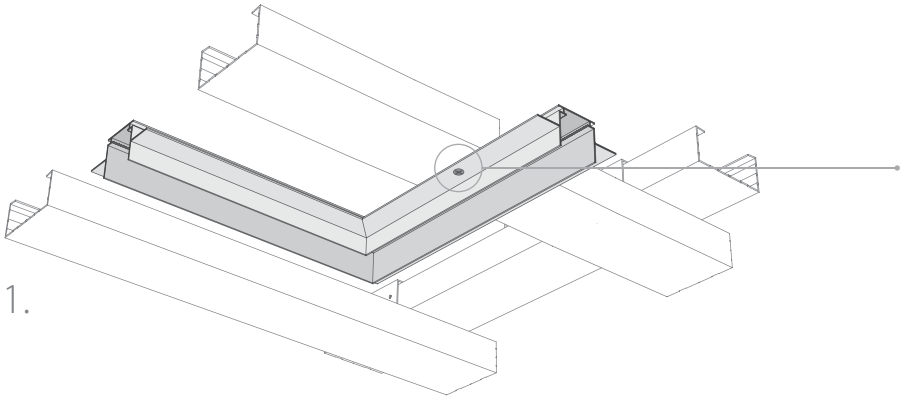
1.

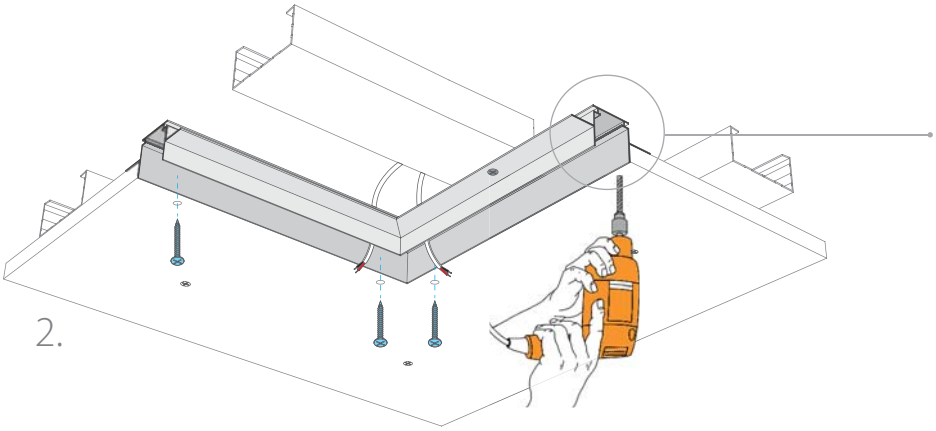
2.

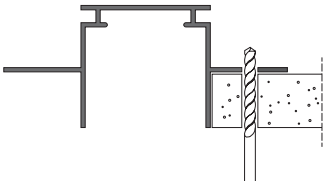

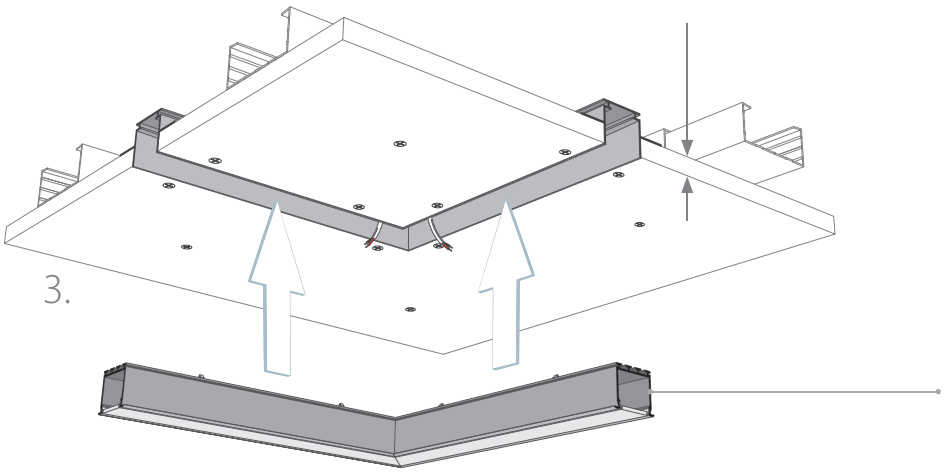
3.

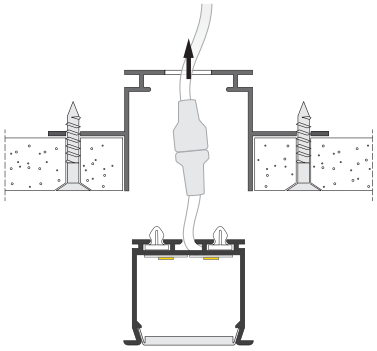

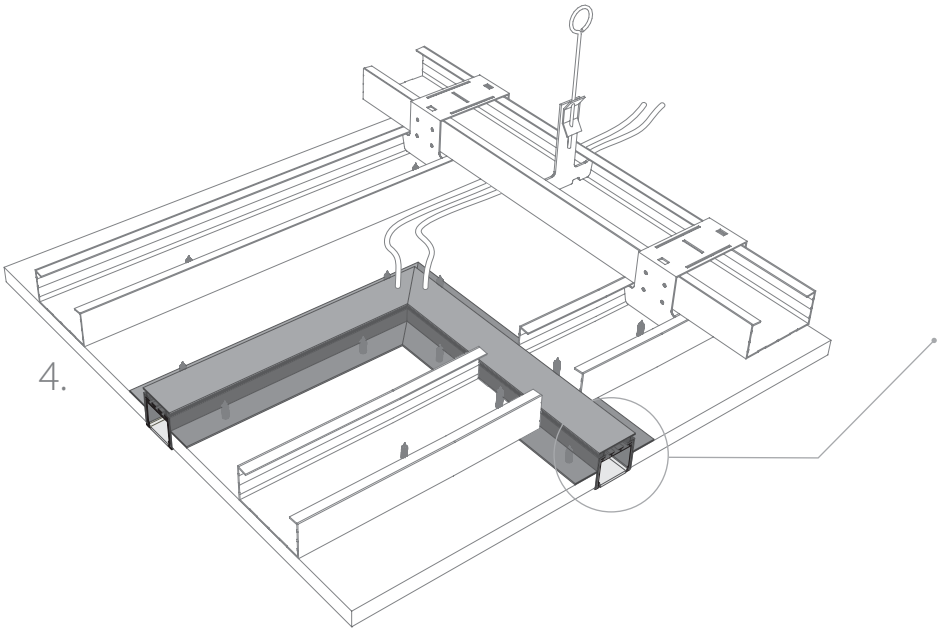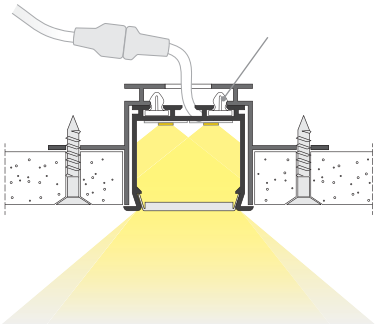
4.